Q32410
1/32

Hurricane Mk.I/II Ejector Type Exhausts

for Revell kit

© Special Hobby 2023

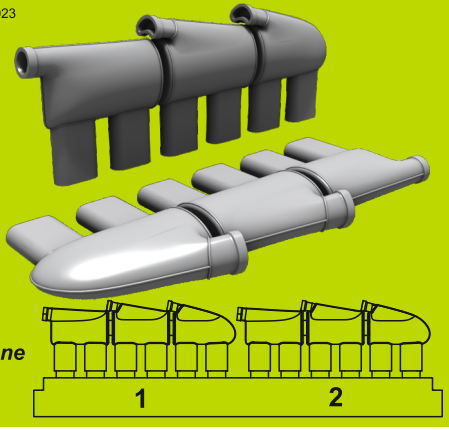

PUR - Polyurethane parts

Díly ohnuté popř. pokroucené vlivem teplotních změn a stárnutí materiálu, mohou být narovnány do požadovaného tvaru pomocí proudu teplé vody nebo vzduchu (fén na vlasy). K lepení použít kyanoakrylátové lepidlo! Kontaktní plochy doporučujeme před lepením odmastit. Různé drátky a tyčinky nejsou přiloženy.

Parts slightly distorted and bent owing to temperature changes or due to material aging can be straightened to requested shape by hot water or hot air jet (hair dryer). This process can be repeated till result is entirely satisfactory. For best result use cyanoacrylate glue! Ungreasing contact areas is recommended before gluing. Wires and rods not included.

Visit our official website and e-shop at
www.cmkkits.com
www.specialhobby.eu
www.facebook.com/specialhobby/

H1020 Razor Saw Profi Set

The set contains one holder, one H1018 Triangle Razor Saw and one H1019 Multi-shift Razor Saw.
Attach the razor blade to the holder as shown in the pictures using the plate with holes and screws.

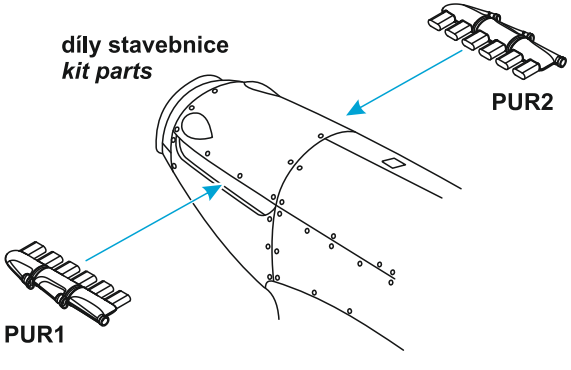

Q32412

Hurricane Mk.I/II Main Wheels (Four Spoke Discs) and Tailwheel

F32381

RAF Whirlwind Fighter Pilot (1942) (also applicable to other RAF fighters)

Q32411

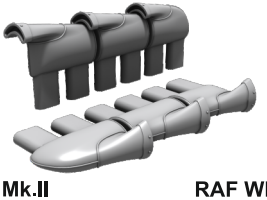

Hurricane Mk.II Fish Tail Type Exhausts

Special Hobby also offers these resin accessories for the 1/32 Hurricane Mk.II (Revell) kit

Special Hobby, Mezilesí 718, Praha 9, 193 00, Czech Republic
e-mail: office@specialhobby.eu